ASSEMBLY MANUAL

BUILT Strength Foundation Series Half Rack (New)

Current SKU: BLT-FD-HLF-RCK

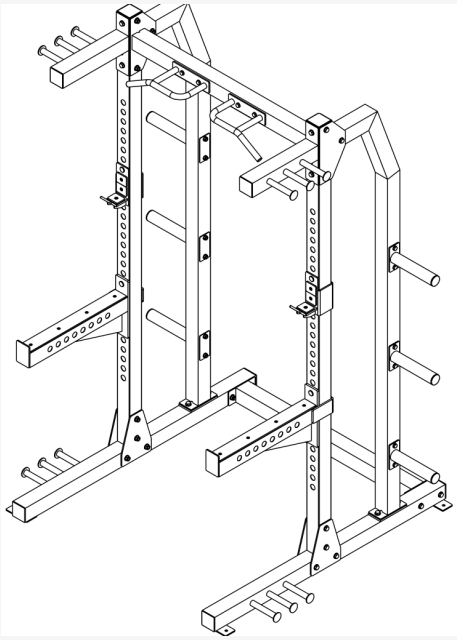

FACTORY REFERENCE / MATCH YOUR CONFIGURATION BEFORE ASSEMBLY

BEFORE YOU START

PEOPLE
2 or more people

TOOLS
Metric sockets / wrenches

WORKSPACE
Firm, level floor

Check every carton. Lay out the parts and hardware. Protect the finish and keep children and pets away. Read the whole guide before beginning.

MATCH YOUR RACK

Original half-rack design with curved rear supports and separate triangular base plates. It is not the straight-upright V2 drawing.

02 / INVENTORY

Parts & hardware

Factory item numbers are retained. Dimensions are in millimeters unless stated otherwise.

MAIN PARTS

ITEM	DESCRIPTION	QTY
1R / 1L	Right / left bottom frame	1 each
2	Front upright frame	2
3	Rear support frame	2
4R / 4L	Right / left upper support	1 each
5	Top connecting frame	1
6	Rear connecting frame	1
7R / 7L	Right / left chin-up bar	1 each
8R / 8L	Right / left bar hook	1 each
9R / 9L	Right / left safety arm	1 each
10	Bottom connecting plate	4
11	Weight plate holder	4
12	Top connecting plate	2
21	Connecting plate	8

Hardware continues on the next page. Match right and left parts to the factory illustration; do not choose sides by viewing direction alone.

02 / INVENTORY

Hardware schedule

Use this list together with the factory exploded drawing.

HARDWARE

ITEM	DESCRIPTION	QTY
13	M12 x 100 hex bolt	22
14	M12 flat washer	48
15	M12 nylon lock nut	22
16	M12 x 20 hex bolt	4
17	M10 x 95 hex bolt	12
18	M10 flat washer	32
19	M10 nylon lock nut	16
20	M10 x 100 hex bolt	4

SOURCE NOTE

Item (20), four M10 x 100 bolts, is listed but not clearly located in the exploded view. Keep it separate from the M10 x 95 bolts and use an intact corresponding joint or clearly identified kit to establish its location.

Missing or damaged parts? Check every carton and all packing material. Contact Build A Gym with your order number, current SKU, factory reference, and clear photos.

03 / ASSEMBLY / STEP 01

Position the bases and uprights

Place bottom frames (1R/1L) parallel, with their long feet toward the lifting area. With helpers supporting the frame, locate front uprights (2), rear supports (3), and bottom plates (10). Follow the exploded drawing for the M12 x 100 joints (13/14/15); leave them loose.

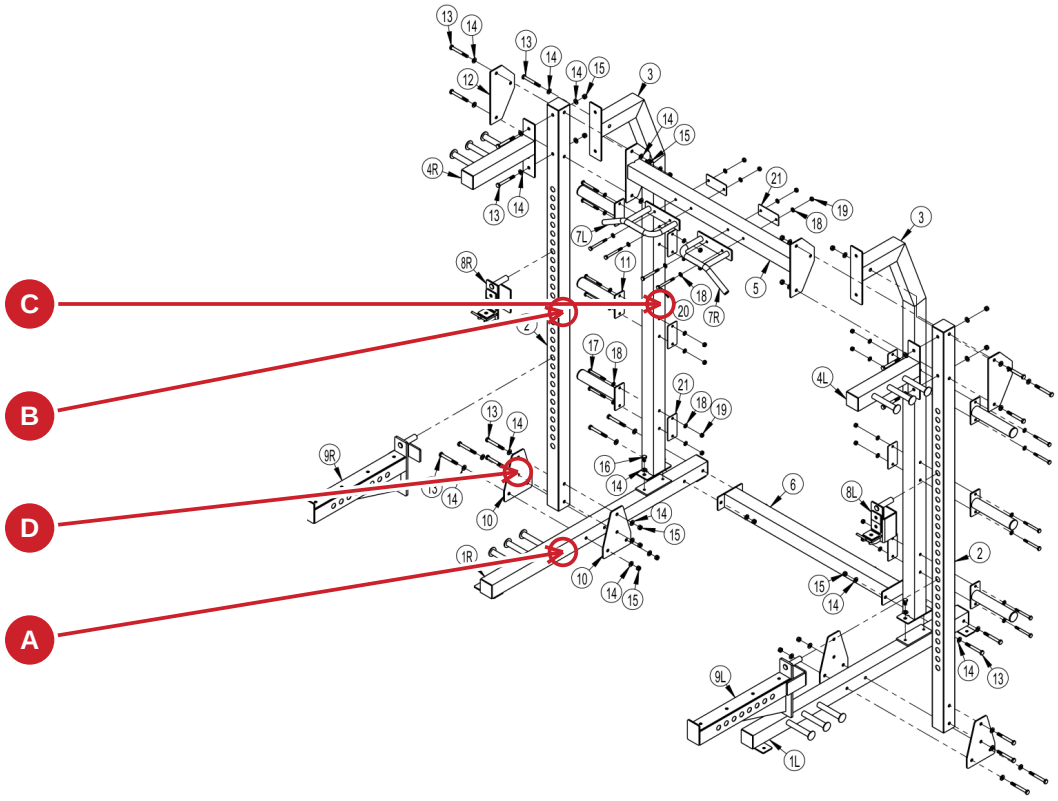

RED LETTERS IDENTIFY THE PARTS / JOINTS FOR THIS STEP

- **A** Bottom frame - item 1R / 1L
- **B** Front upright - item 2
- **C** Rear support - item 3
- **D** Bottom connecting plate - item 10

Red letters are guide markers, not factory item numbers. Arrows identify locations; assembled views may hide the fastening sequence.

03 / ASSEMBLY / STEP 02

Join the lower frame

Fit rear connecting frame (6) between the bases as shown. The drawing calls out the short M12 x 20 bolts (16) with washers (14) at this connection. Confirm each bolt engages the intended threaded joint without forcing it.

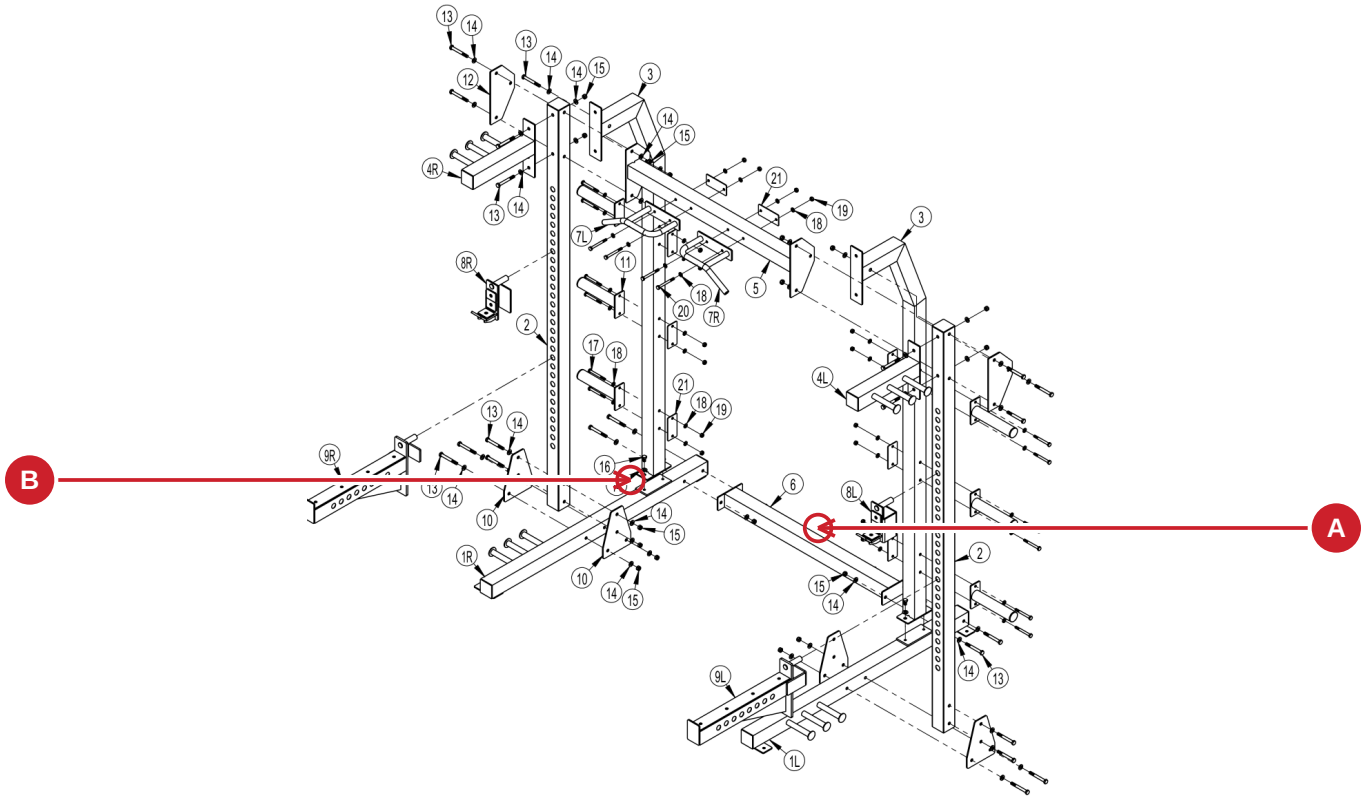

RED LETTERS IDENTIFY THE PARTS / JOINTS FOR THIS STEP

- **A** Rear connecting frame - item 6
- **B** Lower joint: short M12 x 20 - item 16

Red letters are guide markers, not factory item numbers. Arrows identify locations; assembled views may hide the fastening sequence.

03 / ASSEMBLY / STEP 03

Fit the upper frame

While helpers stabilize the uprights, position upper supports (4R/4L), top frame (5), and top plates (12). Follow the exploded drawing for M12 frame fasteners. Do not release a tall upright until it is braced by the frame.

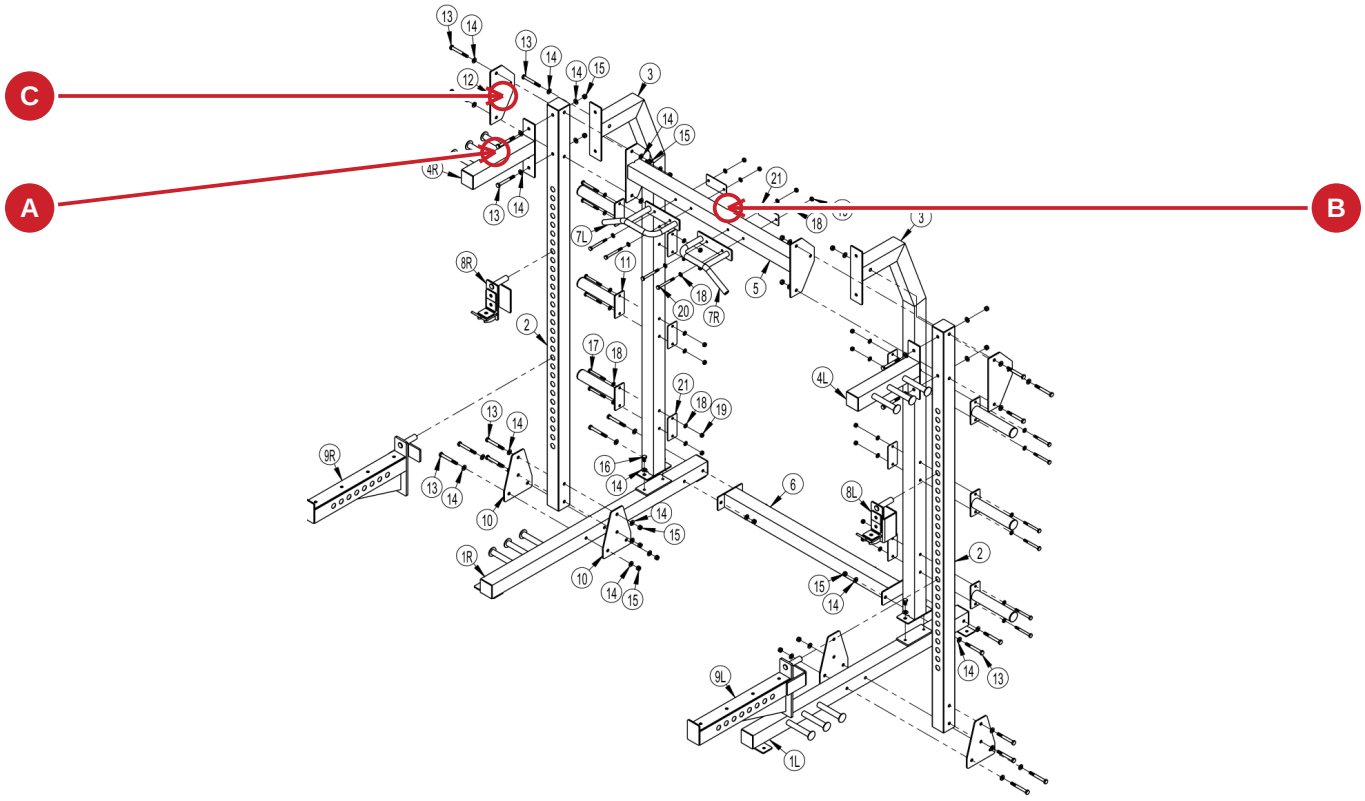

RED LETTERS IDENTIFY THE PARTS / JOINTS FOR THIS STEP

- **A** Upper support - item 4R / 4L
- **B** Top connecting frame - item 5
- **C** Top connecting plate - item 12

Red letters are guide markers, not factory item numbers. Arrows identify locations; assembled views may hide the fastening sequence.

03 / ASSEMBLY / STEP 04

Fit chin-up bars and plate holders

Locate chin-up bars (7R/7L), weight holders (11), and connecting plates (21) in the exploded view. Use M10 x 95 bolts (17) at joints labeled (17), with washers (18) and nuts (19). Keep the four M10 x 100 bolts (20) separate: their exact locations are not clearly labeled, so do not swap the two lengths by appearance.

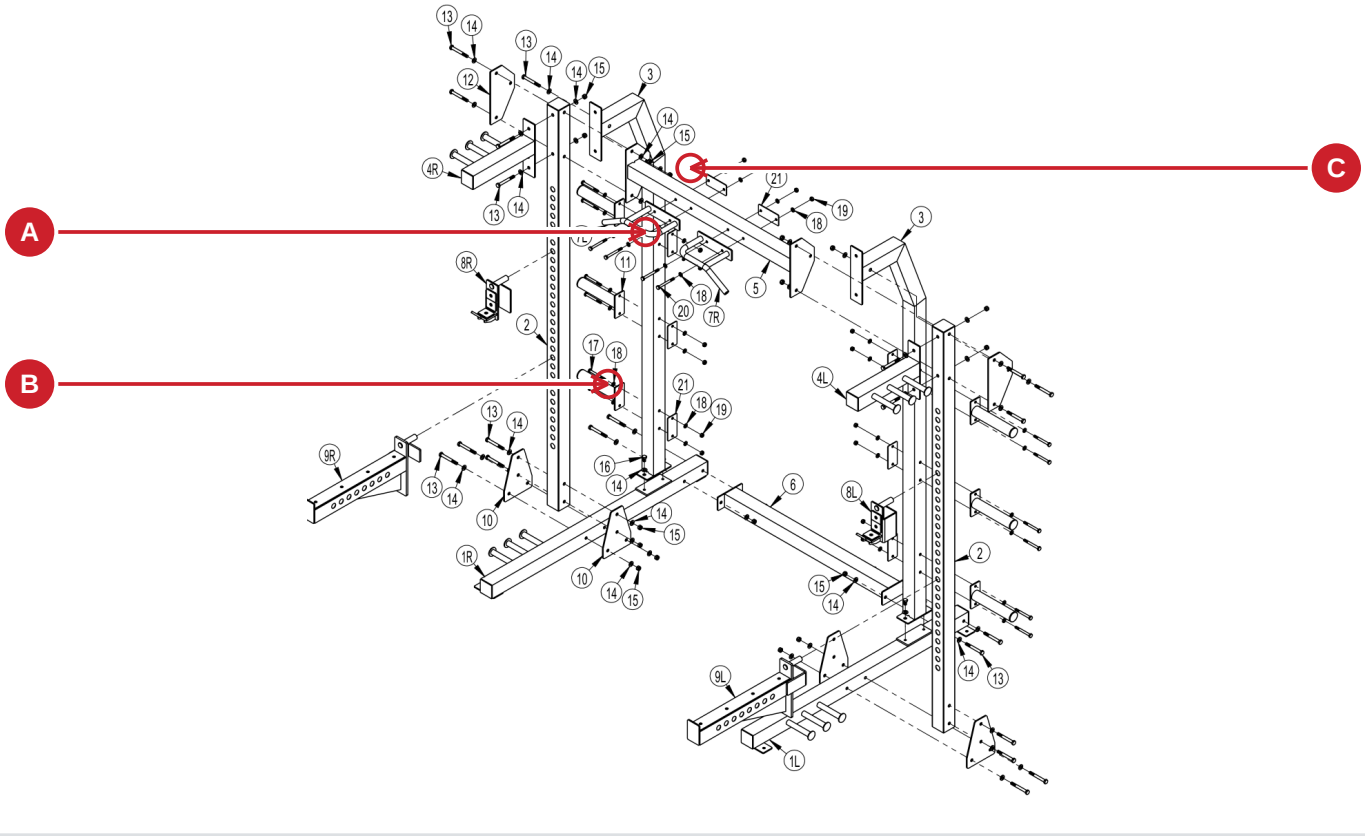

RED LETTERS IDENTIFY THE PARTS / JOINTS FOR THIS STEP

- **A** Chin-up bar - item 7R / 7L
- **B** Weight plate holder - item 11
- **C** Accessory connecting plate - item 21

Red letters are guide markers, not factory item numbers. Arrows identify locations; assembled views may hide the fastening sequence.

03 / ASSEMBLY / STEP 05

Set the hooks and safety arms

Install hooks (8R/8L) and safety arms (9R/9L) as matching pairs at equal heights. Seat each attachment fully and engage its supplied retaining mechanism. Do not use a hook or arm with a missing retainer or an uncertain locked position.

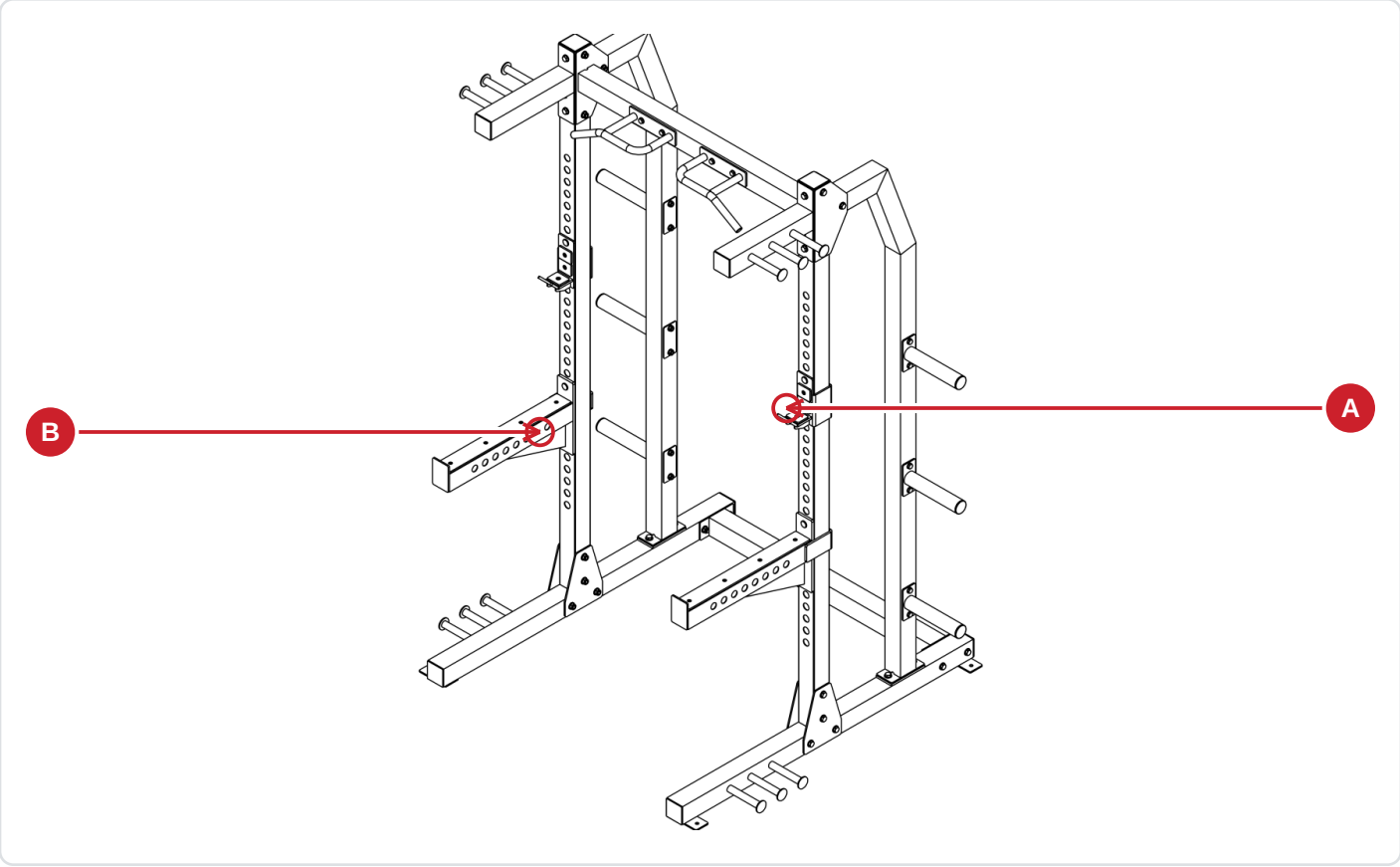

RED LETTERS IDENTIFY THE PARTS / JOINTS FOR THIS STEP

- **A** Bar hook - item 8R / 8L
- **B** Safety arm - item 9R / 9L

Red letters are guide markers, not factory item numbers. Arrows identify locations; assembled views may hide the fastening sequence.

03 / ASSEMBLY / STEP 06

Secure and inspect the rack

Square the empty frame and check that all feet sit flat. Tighten the installed frame and accessory joints. Follow any anchoring instructions supplied with the unit. Check the hooks and arms without load. Do not use an unstable frame or an incompletely attached accessory.

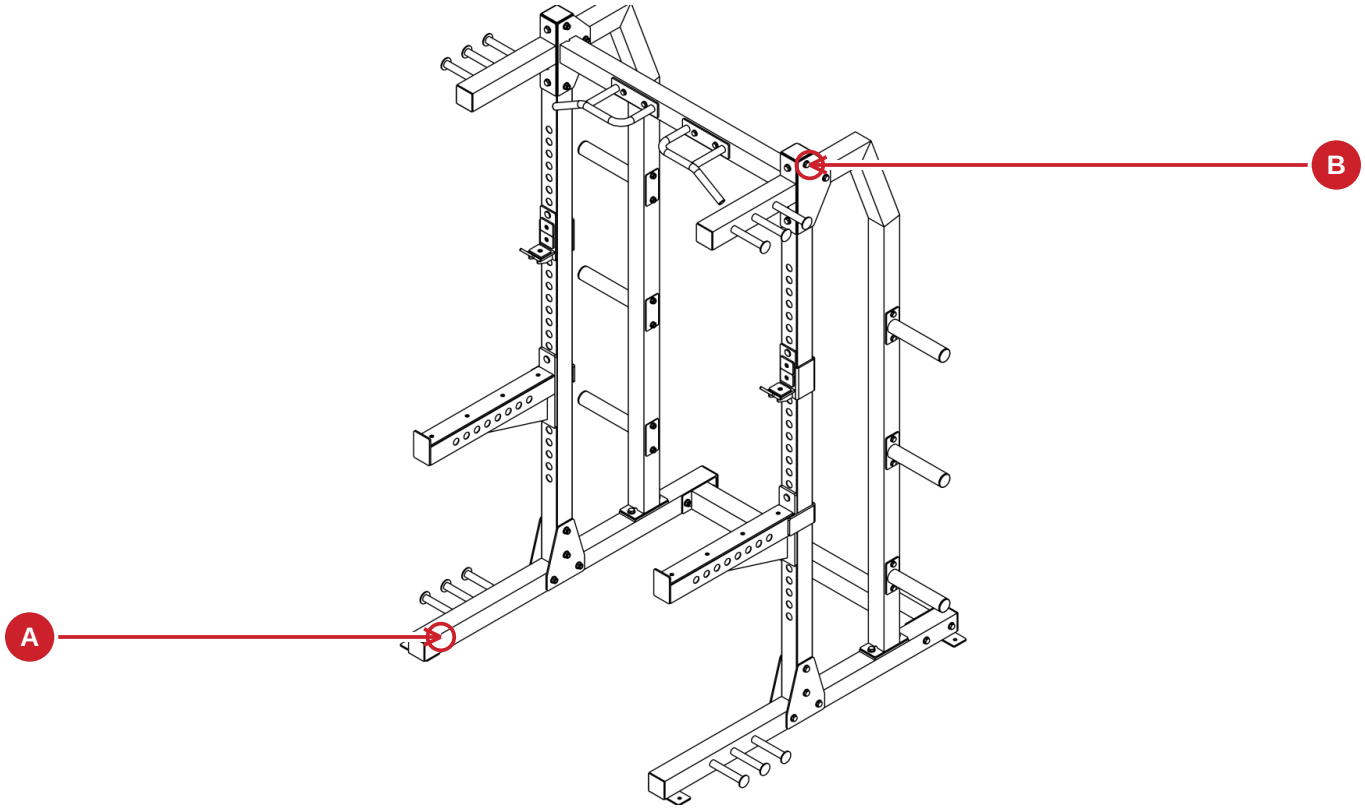

RED LETTERS IDENTIFY THE PARTS / JOINTS FOR THIS STEP

- **A** Feet: check level floor contact
- **B** Upper frame joints: inspect installed fasteners

Red letters are guide markers, not factory item numbers. Arrows identify locations; assembled views may hide the fastening sequence.

04 / BEFORE USE

Final checks & source notes

Complete these checks with the rack empty.

- [ ] All parts are present, correctly oriented, and free from damage.
- [ ] All installed fasteners are tightened; no joint or storage surface moves.
- [ ] Feet sit flat on a firm, level floor; the rack does not rock.
- [ ] Hooks and safety components are paired at equal heights, with retainers fully engaged.
- [ ] Any anchoring and installation instructions supplied with the rack have been followed.

CAPACITY AND MAINTENANCE

Follow the manufacturer’s load limits supplied with your equipment. This source does not provide a numeric load rating or tightening torque; neither is inferred here. Inspect fasteners and contact surfaces regularly. Stop using the rack if a part loosens, wears, cracks, or is damaged.

SOURCE NOTES & ASSEMBLY INTERPRETATIONS

Item (20), four M10 x 100 bolts, is listed but not clearly located in the exploded view. Keep it separate from the M10 x 95 bolts and use an intact corresponding joint or clearly identified kit to establish its location.

The source does not specify anchoring, tightening torque, or the details of attachment retainers. Follow the unit’s supplied installation information; do not infer an anchor specification from this drawing.

How this guide was prepared: Factory diagrams and item numbers are preserved. English descriptions and the assembly order have been organized for readability. Where the source supplies only a drawing, the sequence is inferred from the visible geometry; unresolved specifications are identified above. No unverified bolt sizes, capacities, or torque values have been added.

Need help? Contact Build A Gym through buildagym.com. Include your order number, SKU BLT-FD-HLF-RCK, reference BS-HLF-RCK, and photographs of the joint and hardware.

05 / FACTORY REFERENCE

Factory reference 1

Original factory geometry and labels. Use the English parts schedule and source notes in this guide.

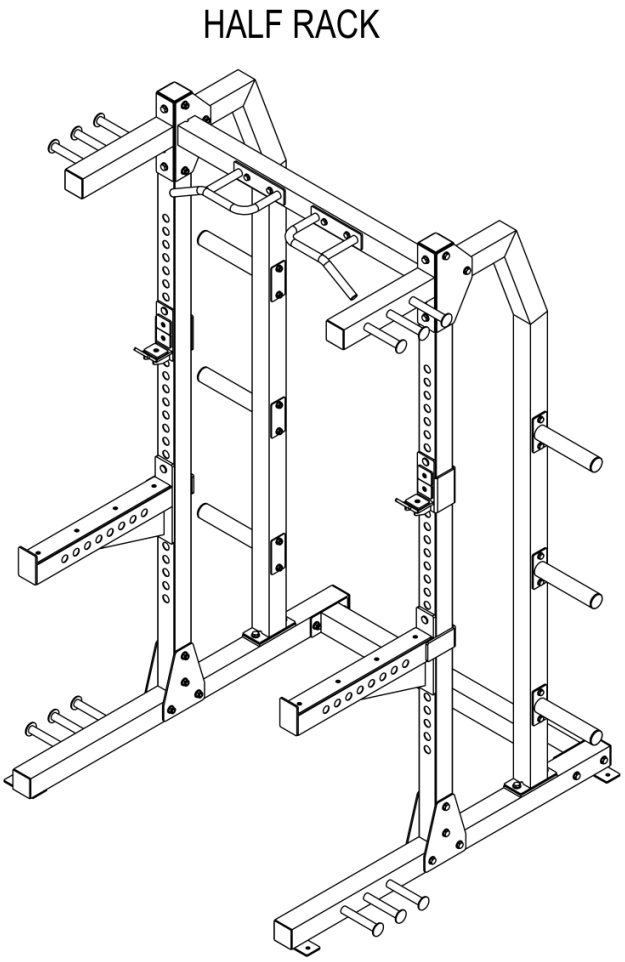

ITEM NO.	DESCRIPTION	Q'TY	ITEM NO.	DESCRIPTION	Q'TY
1R	RIGHT BOTTOM FRAME	1	9L	LEFT SAFETY ARM	1
1L	LEFT BOTTOM FRAME	1	10	BOTTOM CONNECT PLATE	4
2	UPRIGHT FRAME	2	11	WEIGHT PLATE HOLDER	4
3	SUPPORT FRAME	2	12	TOP CONNECT PLATE	2
4R	RIGHT SUPPORT	1	13	HEX BOLT M12*100	22
4L	LEFT SUPPORT	1	14	WASHER φ12	48
5	TOP CONNECT FRAME	1	15	NYLON NUT M12	22
6	REAR CONNECT FRAME	1	16	HEX BOLT M12*20	4
7R	RIGHT CHIN-UP BAR	1	17	HEX BOLT M10*95	12
7L	LEFT CHIN-UP BAR	1	18	WASHER φ10	32
8R	RIGHT SAFETY HOOK	1	19	NYLON NUT M10	16
8L	LEFT SAFETY HOOK	1	20	HEX BOLT M10*100	4
9R	RIGHT SAFETY ARM	1	21	CONNECT PLATE	8

Reading the reference: Numbered callouts refer to the source parts or fastener groups. Dashed lines show alignment. An assembled view does not reveal every hidden connection. See the source notes for any interpretation or unresolved specification.

05 / FACTORY REFERENCE

Factory reference 2

Original factory geometry and labels. Use the English parts schedule and source notes in this guide.

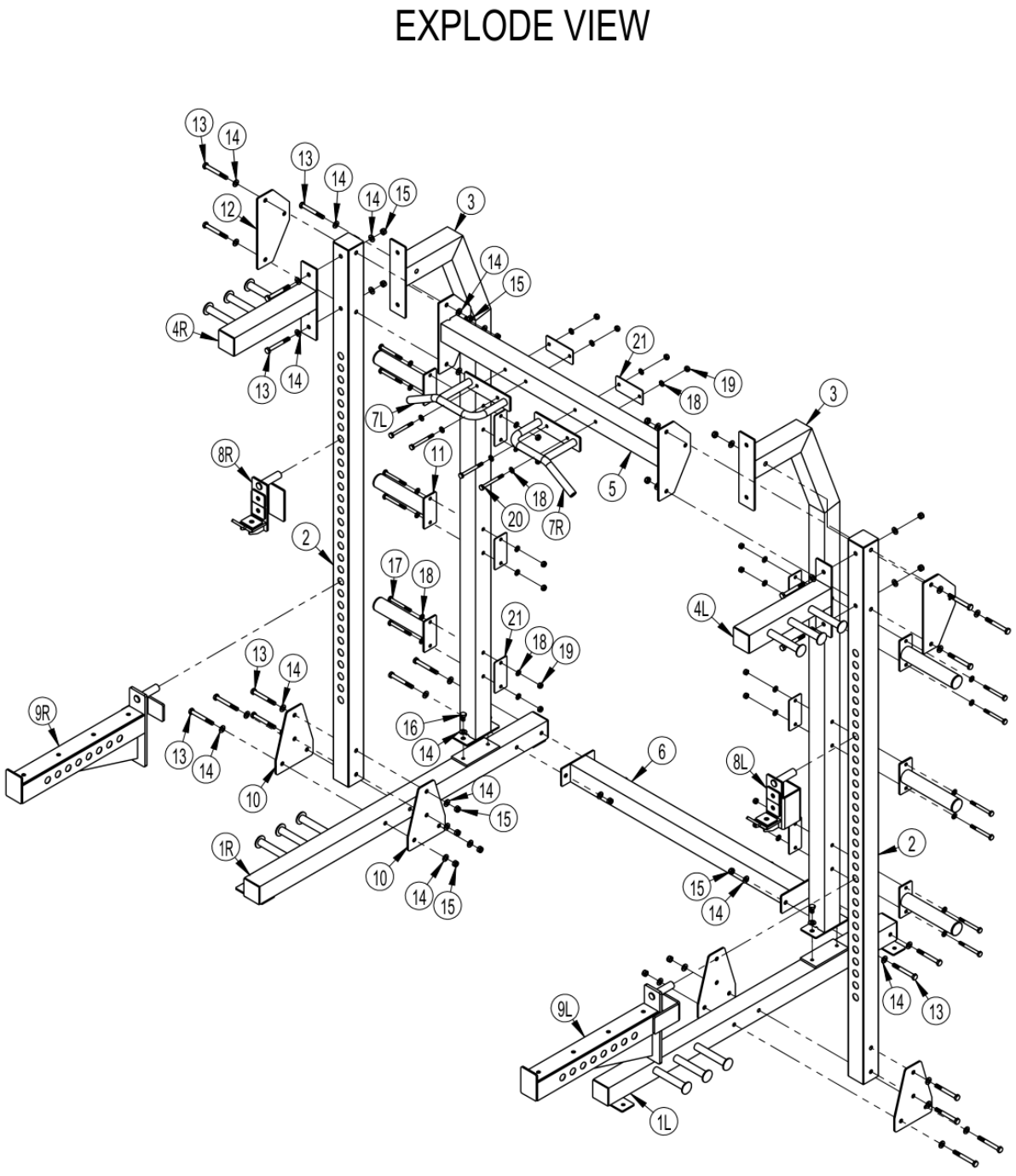

Reading the reference: Numbered callouts refer to the source parts or fastener groups. Dashed lines show alignment. An assembled view does not reveal every hidden connection. See the source notes for any interpretation or unresolved specification.